SUPPLEMENTAL HEATING APPLICATION

REQUIREMENTS

1. *Submit with two photos - one of the stove and one of the vent system on the outside of the building.*
2. Questionnaire and photos must be submitted with application.
3. Questionnaire must be inspected and signed by licensed contractor or member of local fire department when wood burning stove is **NOT** factory installed or commercially installed by appliance distributor or licensed expert.

APPLICANT INFORMATION

DATE OF APPLICATION _____ INSURED'S NAME _____

INSURED'S MAILING ADDRESS _____

STOVE INFORMATION

DATE INSTALLED	INSTALLED BY	IS UNIT U.L. APPROVED Yes ☐ No ☐
MAKE/NAME	USE ☐ Primary Heat ☐ Auxiliary Heat ☐ Cooking ☐ Other (Specify) _____	
TYPE ☐ Radiant ☐ Circulating ☐ Franklin ☐ Other type (Describe) _____		
Is stove vent system equipped with heat or flue radiator?	Are any other heating units vented to chimney? Yes ☐ No ☐ If yes, describe briefly _____	
HOW OFTEN ARE CHIMNEY AND STOVE PIPES CHECKED FOR CREOSOTE BUILDUP?	DATE LAST CLEANED	BY WHOM

INSTALLATION INFORMATION

LOCATION OF STOVE IN HOME			
FLOOR PROTECTION ☐ Asbestos Millboard Covered With Metal ☐ Metal ☐ Stone/Brick ☐ Other (describe):			
WALL PROTECTION ☐ Asbestos Millboard Covered With Metal ☐ Metal ☐ Asbestos Millboard ☐ Other (describe):			IF NONE, IS THIS ACCEPTABLE WITH THE MANUFACTURER? ☐ YES ☐ NO
CHIMNEY TYPE ☐ Factory Chimney ☐ Masonry ☐ Other (describe):	IS PIPE OR CHIMNEY FREE OF CREOSOTE DEPOSIT? ☐ YES ☐ NO		IF FACTORY CHIMNEY IS IT U.L./ALL FUELS LISTED? ☐ YES ☐ NO
DOES VENT PASS THROUGH A COMBUSTIBLE PARTITION? ☐ YES ☐ NO	IF YES, IS PROTECTION THIMBLE OR SLEEVE USED? ☐ YES ☐ NO	DOES PIPE VENT PASS DIRECTLY THROUGH THE ROOF ☐ YES ☐ NO	TYPE OF FIRE PROTECTION USED AT CEILING:

CLEARANCES

1. _____ INCHES SIDE OF UNIT TO NEAREST WALL
2. _____ INCHES REAR OF UNIT TO WALL
3. _____ INCHES TOP OF STOVE PIPE TO CEILING
4. _____ INCHES BOTTOM OF UNIT TO FLOOR
5. _____ INCHES FRONT OF UNIT TO FRONT EDGE OF FLOOR PROTECTION
6. _____ INCHES SIZE OF PIPE USED
7. _____ INCHES SIZE OF THIMBLE OR ROOF JOIST SHIELD
8. DO THESE DISTANCES COMPLY WITH THE MANUFACTURER'S STANDARDS? ☐ YES ☐ NO

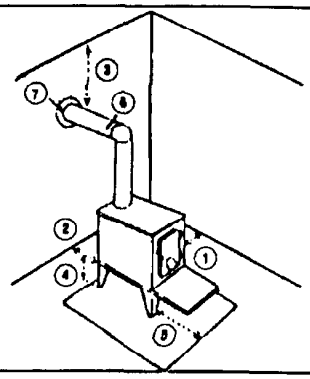

MISCELLANEOUS

1. TYPE AND NUMBER OF FIRE EXTINGUISHERS? _____	**REMARKS**
2. WHERE LOCATED? _____	
3. TYPE AND NUMBER OF SMOKE ALARMS? _____	

INSPECTOR

SIGNATURE	TITLE
DATE	